Charter Township of Ypsilanti

Residential Deck Plan Review Checklist
Based on the
2015 Michigan Residential Code

Footings

For attached decks:
R403 Footings shall be supported on undisturbed natural soils or engineered fill.
No post to be located closer than 36" to the house unless it rests on undisturbed soil.
R403.1.4 Footings for deck and stairs must extend a min. of 42" below actual grade.
A footing inspection is required after holes are dug and cleaned out and prior to placing anything in the hole.

For detached decks:
R403.1.4 ex. 6. Decks not attached to the house do not require footings that extend below frost. Grass, top soil and other organic material shall be removed prior to placement of posts, deck blocks, etc.
No footing inspection is required.

Ledger Boards
R507.2.1 (1) Ledger boards shall be bolted to the house. (2" from top and bottom/between 2" and 5" from ends and shall be staggered)
R507.2.1 Decks cannot be supported upon masonry veneer.
R507.2.4 Attachment for lateral loads. (must be anchored to home floor system)
R703.1 Flashing shall extend under existing siding and over the ledger board.
Decks cannot bear on existing cantilever from home, without engineer approval. Sealed letter required.

Beams
R301.4 & R301.5 Beams shall consist of a minimum of 2-2x with posts spaced to provide a min. of 50 lb/sq. ft. load.

Joists
Floor joists shall be designed according to table R507.4 When required, joist hangers shall be triple dipped galvanized or better. Joists shall be supported laterally by attachment to a header, band, or rim joist.
Joists shall be spaced according to the manufactures specs for the decking used.

Stairs
R311- *Max Riser height- 8 ¼ *Min Tread depth- 9" measured nose to nose *Nosing Minimum ¾ - Maximum 1¼ * Minimum Width – 36"
The greatest riser height within a flight of stairs shall not exceed the smallest by more than 3/8 inch. Openings in adjoining risers may not permit the passage of a 4" sphere when total rise of stairs exceeds 30".

Handrail
R311.7.8 A graspable handrail is required when there are 4 or more risers. The handrail measured vertically from the tread nosing shall be 34" minimum and 38" maximum. Handrail ends shall be returned. Handrails shall have a space not less than 1½" between the wall and handrail. Handrail outside diameter: Circular: minimum 1¼" – Maximum 2". Non Circular: Max cross section= 2¼".

Guardrail
R312.1 All decks located more than 30" above adjacent grade shall have a guardrail not less than 36" in height, measured vertically above adjacent walking surface or adjacent fixed seating. Adjacent grade shall be measured 36" horizontally from exterior edge of deck.
R312.2 No opening in guardrail may permit the passage of a 4" sphere.
Guardrails and handrails must be able to withstand a 200lb. force in any direction.

Miscellaneous
R317 All framing members shall be pressure treated.
All fasteners shall be hot dipped-zinc coated galvanized steel, stainless steel, silicon bronze or copper.

A rough framing inspection is required prior to the placement of decking if the bottom side of joists is closer than 18" to the ground or if underside of deck will be concealed by skirting or other means.

A final inspection is required upon completion.

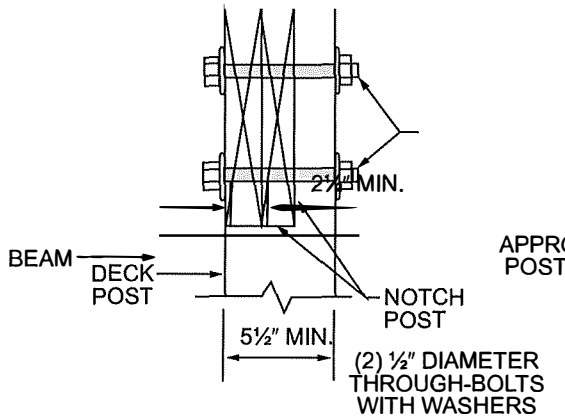

APPROVED POST CAP

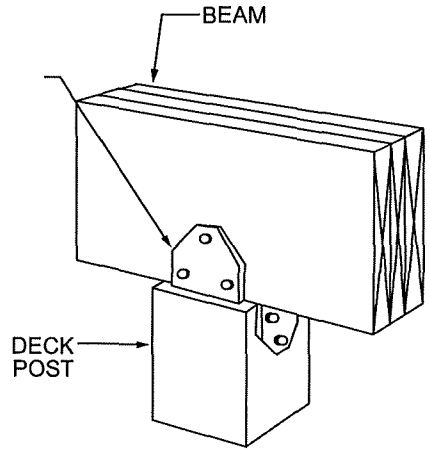

NOTCHED POST

POST CAP

For SI: 1 inch = 25.4 mm.

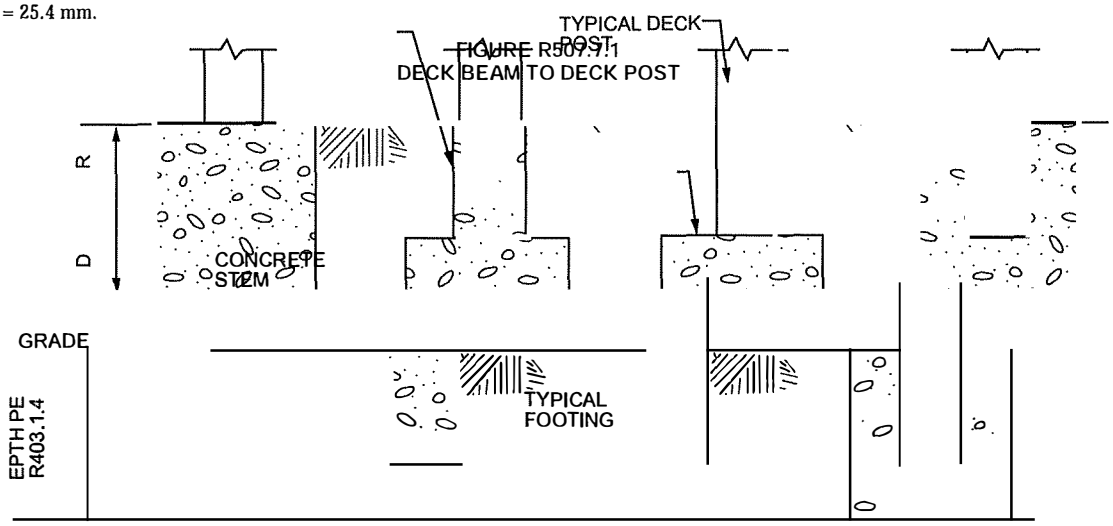

FIGURE R507.8.1
TYPICAL DECK POSTS TO DECK FOOTINGS

INTERNATIONAL CODE COUNCIL®

Copyright © 2015 ICC. ALL RIGHTS RESERVED. Accessed by Nancy Wyrybkowski on Jan 25, 2016 9:40:31 AM pursuant to License Agreement with ICC. No further reproduction or distribution authorized. ANY UNAUTHORIZED REPRODUCTION OR DISTRIBUTION IS A VIOLATION OF THE FEDERAL COPYRIGHT ACT AND THE LICENSE AGREEMENT, AND SUBJECT TO CIVIL AND CRIMINAL PENALTIES THEREUNDER.

ALTERNATIVE LATERAL SUPPORT DETAIL

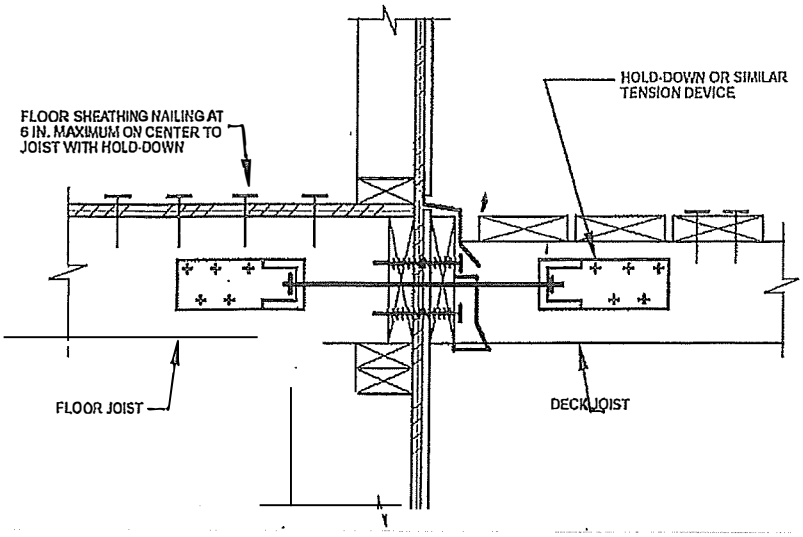

TABLE R507.4
MAXIMUM JOIST SPACING

MATERIAL TYPE AND NOMINAL SIZE	MAXIMUM ON-CENTER JOIST SPACING	
	Perpendicular to joist	Diagonal to joist[a]
$1^1/_4$-inch-thick wood	16 inches	12 inches
2-inch-thick wood	24 inches	16 inches
Plastic composite	In accordance with Section R507.3	In accordance with Section R507.3

For SI: 1 inch = 25.4 mm, 1 foot = 304.8 mm, 1 degree = 0.01745 rad.
a. Maximum angle of 45 degrees from perpendicular for wood deck boards

TABLE R507.5
DECK JOIST SPANS FOR COMMON LUMBER SPECIES[f] (ft. - in.)

SPECIES[a]	SIZE	SPACING OF DECK JOISTS WITH NO CANTILEVER[b] (Inches)			SPACING OF DECK JOISTS WITH CANTILEVERS[c] (Inches)		
		12	16	24	12	16	24
Southern pine	2 × 6	9-11	9-0	7-7	6-8	6-8	6-8
	2 × 8	13-1	11-10	9-8	10-1	10-1	9-8
	2 × 10	16-2	14-0	11-5	14-6	14-0	11-5
	2 × 12	18-0	16-6	13-6	18-0	16-6	13-6
Douglas fir-larch[d], hem-fir[d] spruce-pine-fir[d]	2 × 6	9-6	8-8	7-2	6-3	6-3	6-3
	2 × 8	12-6	11-1	9-1	9-5	9-5	9-1
	2 × 10	15-8	13-7	11-1	13-7	13-7	11-1
	2 × 12	18-0	15-9	12-10	18-0	15-9	12-10
Redwood, western cedars, ponderosa pine[e], red pine[e]	2 × 6	8-10	8-0	7-0	5-7	5-7	5-7
	2 × 8	11-8	10-7	8-8	8-6	8-6	8-6
	2 × 10	14-11	13-0	10-7	12-3	12-3	10-7
	2 × 12	17-5	15-1	12-4	16-5	15-1	12-4

For SI: 1 inch = 25.4 mm, 1 foot = 304.8 mm, 1 pound per square foot = 0.0479 kPa, 1 pound = 0.454 kg.
a. No. 2 grade with wet service factor.
b. Ground snow load, live load = 40 psf, dead load = 10 psf, L/Δ = 360.
c. Ground snow load, live load = 40 psf, dead load = 10 psf, L/Δ = 360 at main span, L/Δ = 180 at cantilever with a 220-pound point load applied to end.
d. Includes incising factor.
e. Northern species with no incising factor
f. Cantilevered spans not exceeding the nominal depth of the joist are permitted.

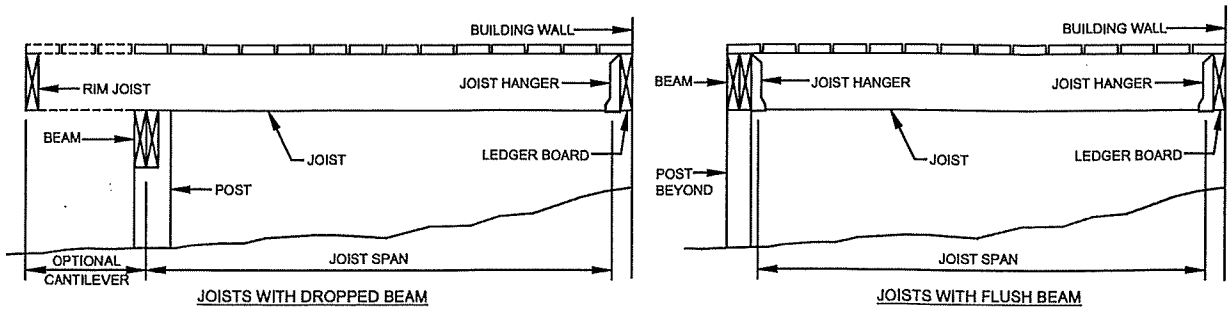

FIGURE R507.5
TYPICAL DECK JOIST SPANS

INTERNATIONAL CODE COUNCIL®
Copyright © 2015 ICC. ALL RIGHTS RESERVED. Accessed by Nancy Wyrybkowski on Jan 25, 2016 9:40:31 AM pursuant to License Agreement with ICC. No further reproduction or distribution authorized. ANY UNAUTHORIZED REPRODUCTION OR DISTRIBUTION IS A VIOLATION OF THE FEDERAL COPYRIGHT ACT AND THE LICENSE AGREEMENT, AND SUBJECT TO CIVIL AND CRIMINAL PENALTIES THEREUNDER.

TABLE R507.6
DECK BEAM SPAN LENGTHS[a, b] (ft. - in.)

SPECIES[c]	SIZE[d]	DECK JOIST SPAN LESS THAN OR EQUAL TO: (feet)						
		6	8	10	12	14	16	18
Southern pine	2 – 2 × 6	6-11	5-11	5-4	4-10	4-6	4-3	4-0
	2 – 2 × 8	8-9	7-7	6-9	6-2	5-9	5-4	5-0
	2 – 2 × 10	10-4	9-0	8-0	7-4	6-9	6-4	6-0
	2 – 2 × 12	12-2	10-7	9-5	8-7	8-0	7-6	7-0
	3 – 2 × 6	8-2	7-5	6-8	6-1	5-8	5-3	5-0
	3 – 2 × 8	10-10	9-6	8-6	7-9	7-2	6-8	6-4
	3 – 2 × 10	13-0	11-3	10-0	9-2	8-6	7-11	7-6
	3 – 2 × 12	15-3	13-3	11-10	10-9	10-0	9-4	8-10
Douglas fir-larch[e], hem-fir[e], spruce-pine-fir[e], redwood, western cedars, ponderosa pine[f], red pine[f]	3 × 6 or 2 – 2 x 6	5-5	4-8	4-2	3-10	3-6	3-1	2-9
	3 × 8 or 2 – 2 × 8	6-10	5-11	5-4	4-10	4-6	4-1	3-8
	3 × 10 or 2 – 2 × 10	8-4	7-3	6-6	5-11	5-6	5-1	4-8
	3 × 12 or 2 – 2 × 12	9-8	8-5	7-6	6-10	6-4	5-11	5-7
	4 × 6	6-5	5-6	4-11	4-6	4-2	3-11	3-8
	4 × 8	8-5	7-3	6-6	5-11	5-6	5-2	4-10
	4 × 10	9-11	8-7	7-8	7-0	6-6	6-1	5-8
	4 × 12	11-5	9-11	8-10	8-1	7-6	7-0	6-7
	3 – 2 × 6	7-4	6-8	6-0	5-6	5-1	4-9	4-6
	3 – 2 × 8	9-8	8-6	7-7	6-11	6-5	6-0	5-8
	3 – 2 × 10	12-0	10-5	9-4	8-6	7-10	7-4	6-11
	3 – 2 × 12	13-11	12-1	10-9	9-10	9-1	8-6	8-1

For SI: 1 inch = 25.4 mm, 1 foot = 304.8 mm, 1 pound per square foot = 0.0479 kPa, 1 pound = 0.454 kg.

a. Ground snow load, live load = 40 psf, dead load = 10 psf, L/Δ = 360 at main span, L/Δ = 180 at cantilever with a 220-pound point load applied at the end.

b. Beams supporting deck joists from one side only.

c. No. 2 grade, wet service factor.

d. Beam depth shall be greater than or equal to depth of joists with a flush beam condition.

e. Includes incising factor.

f. Northern species. Incising factor not included.

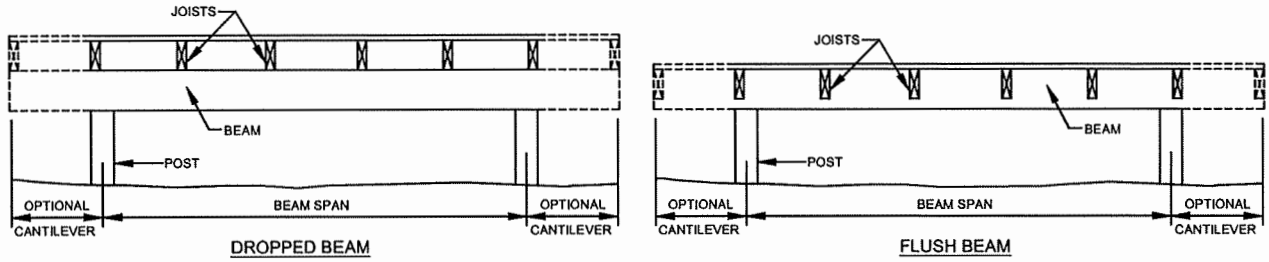

FIGURE R507.6
TYPICAL DECK BEAM SPANS

INTERNATIONAL CODE COUNCIL®
Copyright © 2015 ICC. ALL RIGHTS RESERVED. Accessed by Nancy Wyrybkowski on Jan 25, 2016 9:40:31 AM pursuant to License Agreement with ICC. No further reproduction or distribution authorized. ANY UNAUTHORIZED REPRODUCTION OR DISTRIBUTION IS A VIOLATION OF THE FEDERAL COPYRIGHT ACT AND THE LICENSE AGREEMENT, AND SUBJECT TO CIVIL AND CRIMINAL PENALTIES THEREUNDER.